Coils - Connectors

COIL S5 - CLASS H - 23 W

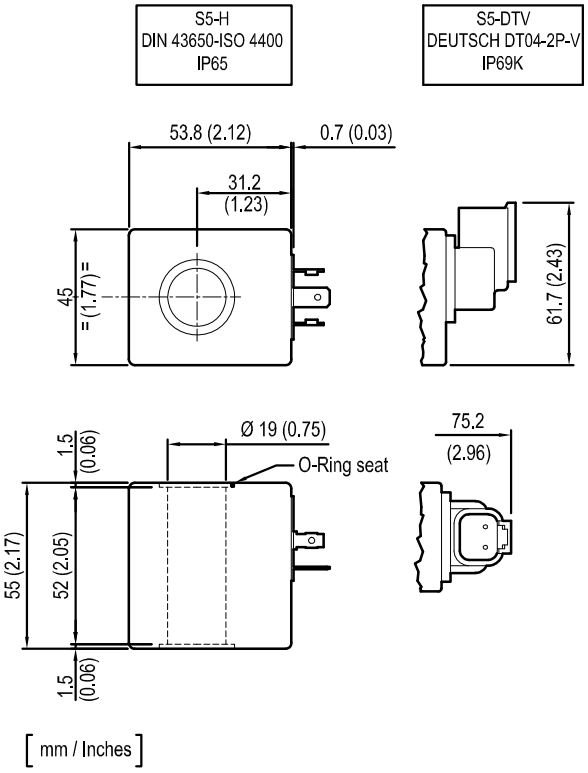

OD.02.09 - X - Y - Z - 01

TECHNICAL DATA

Weight: 0.47 kg (1.04 lbs)

Heat insulation Class H: 180°C (356°F)

Ambient temperature range: -30/+70°C (-22/+158°F)

Inlet voltage fluctuations must not exceed ±10% of nominal voltage to obtain correct operation and long life coils.

X	Y	Connections	Circuit	Voltage
01	30	DIN 43650 - ISO 4400	Standard	DC
20	3P	DEUTSCH DT-04-2P-V	Standard	DC
22	3P	DEUTSCH DT-04-2P-V	Bidirectional Diode	DC

Z	Voltage V	Resistance Ohm (±7%)	Power W	Current A		ΔT °C (°F)
	Nominal	Ta = 20-25°C (68-77°F)	Cold coil	Cold coil	Hot coil	1 hour energized at Ta=20-25°C (68-77°F) Nominal voltage
OB	12 DC	6.2	23	1.9	1.4	92-96 (198-205)
OC	24 DC	24.9	23	1.0	0.7	

Preferred types (readily available)

Type	Material number
OD02090130OB01	R901090827
OD02090130OC01	R901090828
OD0209203POB01	R901110011

Type	Material number
OD0209203POC01	R901110012
OD0209223POB01	R901090829
OD0209223POC01	R901110013

Further types available by request